8” Coupler

Detail

- Galvanized Steel (ASTM A653 and A924)
- G-60 Galvanized Coating (ASTM A653 and ASTM 90)
- Available in Specialty Metals:
  Aluminum (ASTM B209 Alloy 3003 Temper H14)
  304 Stainless Steel (ASTM A480 2B Finish)
- G-90 available upon request
- Pressure Rating: Designed per SMACNA Third Edition 2005 Section 4.8 Figure 4-6 Brand Connections
- Tested to meet SMACNA Leakage Class 3 requirements (Test performed on fittings with no damper)
- Seams sealed with zero VOC integral sealant
- Neoprene backed washers to seal bearing openings
- Dimensional Tolerance: ±1/4”
- Available with 3/8” continuous rod and hardware and 20 gauge damper blade

Profile

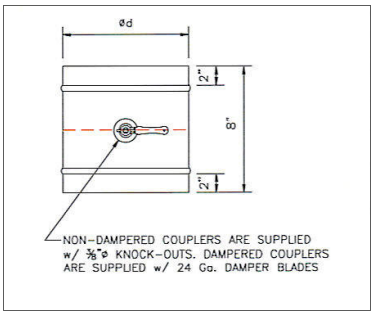

DCS Option

DS38 Option

8” Coupler	Option	Plain End	Riveted	Diameter	Material	Gauge	Option
8CO	S15, S2 = 1.5” or 2” Stand off optoin	P	R	4” to 20”	GA - Galv. S4 - SS304 AL - AL	26,24 26 32	DS= Damper DCS= 3/8” Rod and Damper DS38 = 3/8” Rod, Speedy Stand Off Handle

Item Code Example: 8COS2PR6GA26DS = 8” Coupler, 2” Stand-off, 6”, Galv., 26 ga, w/Damper

Packaging

Product Availability				
Size (Ød)	Gauge Availability		Quantity	
	26 Ga.	24 Ga.	Carton	Skid
6"	YES	YES	10	144
7"	YES	YES	12	144
8"	YES	YES	12	144
9”	YES	YES	12	144
10”	YES	YES	12	144
12”	YES	YES	6	72
14”	YES	YES	6	72

Dampered fittings are available with 1.5" or 2" Stand-Off.

CONTACT

Office: 888.973.7600

1100 Ashwood Drive
Suite 1102
Canonsburg, PA 15317
Can

www.clward.com